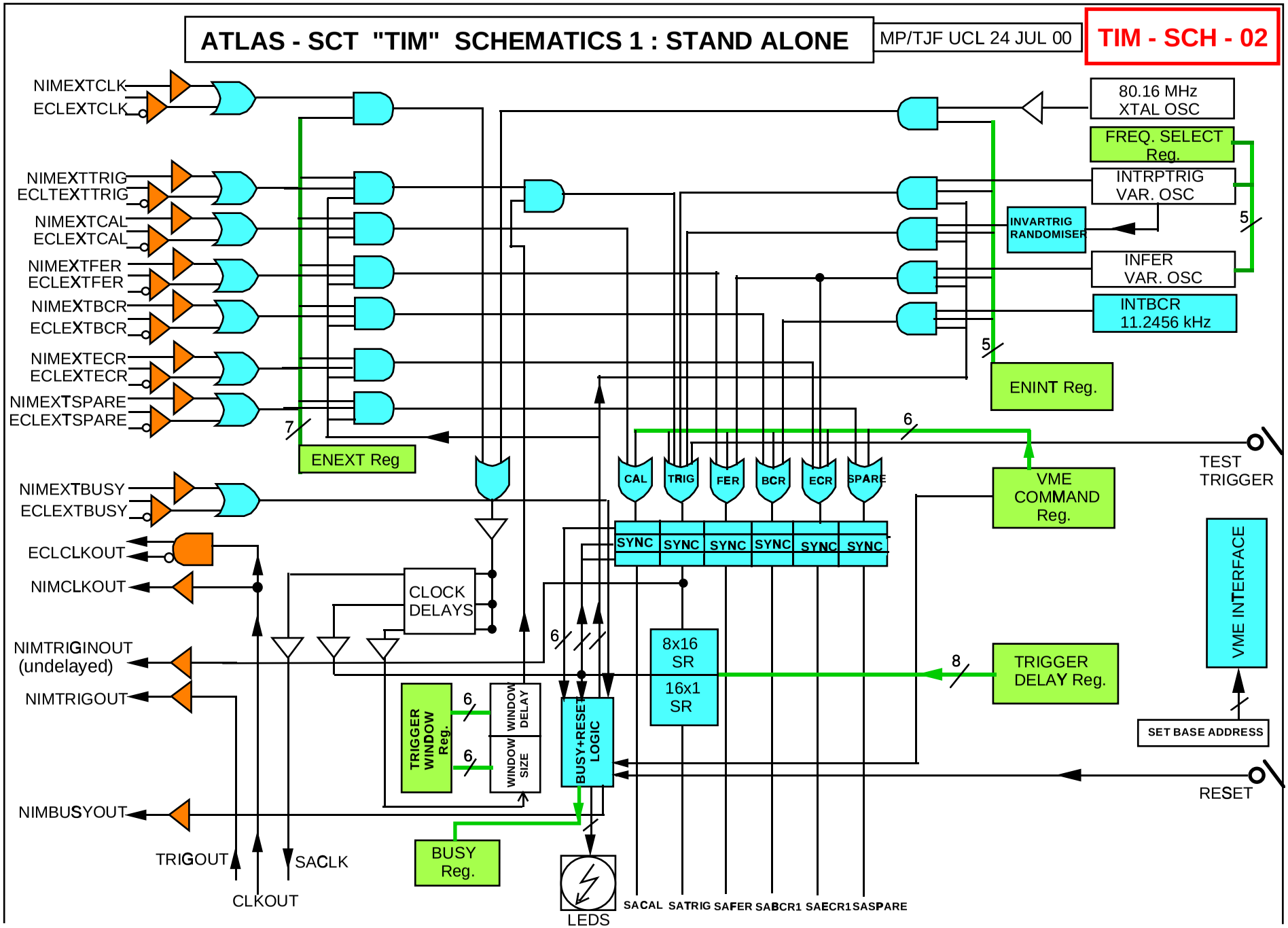
ATLAS - SCT "TIM" SCHEMATICS 1 : STAND ALONE
MP/TJF UCL 24 JUL 00
TIM - SCH - 02
NIMEXTCLK
ECLEXTCLK
NIMEXTTRIG
ECLTEXTTRIG
NIMEXTCAL
ECLEXTCAL
NIMEXTFER
ECLEXTFER
NIMEXTBCR
ECLEXTBCR
NIMEXTECR
ECLEXTECR
NIMEXTSPARE
ECLEXTSPARE
NIMEXTBUSY
ECLEXTBUSY
ECLCLKOUT
NIMCLKOUT
NIMTRIGINOUT
(undelayed)
NIMTRIGOUT
NIMBUSYOUT
TRIGOUT
CLKOUT
SACLK
ENEXT Reg
CLOCK
DELAYS
TRIGGER
WINDOW
Reg.
WINDOW
DELAY
WINDOW
SIZE
BUSY+RESET
LOGIC
BUSY
Reg.
LEDS
CAL
TRIG
FER
BCR
ECR
SPARE
SYNC
8x16
SR
16x1
SR
SACAL
SATRIG
SAFER
SABCR1
SAECR1
SASPARE
80.16 MHz
XTAL OSC
FREQ. SELECT
Reg.
INTRPTRIG
VAR. OSC
INVARTRIG
RANDOMISER
INFER
VAR. OSC
INTBCR
11.2456 kHz
ENINT Reg.
VME
COMMAND
Reg.
TRIGGER
DELAY Reg.
VME INTERFACE
SET BASE ADDRESS
TEST
TRIGGER
RESET