# ATLAS - SCT "TIM" SCHEMATICS 2 : RUN / INTERFACES

MP/TJF UCL 24 JUL 00
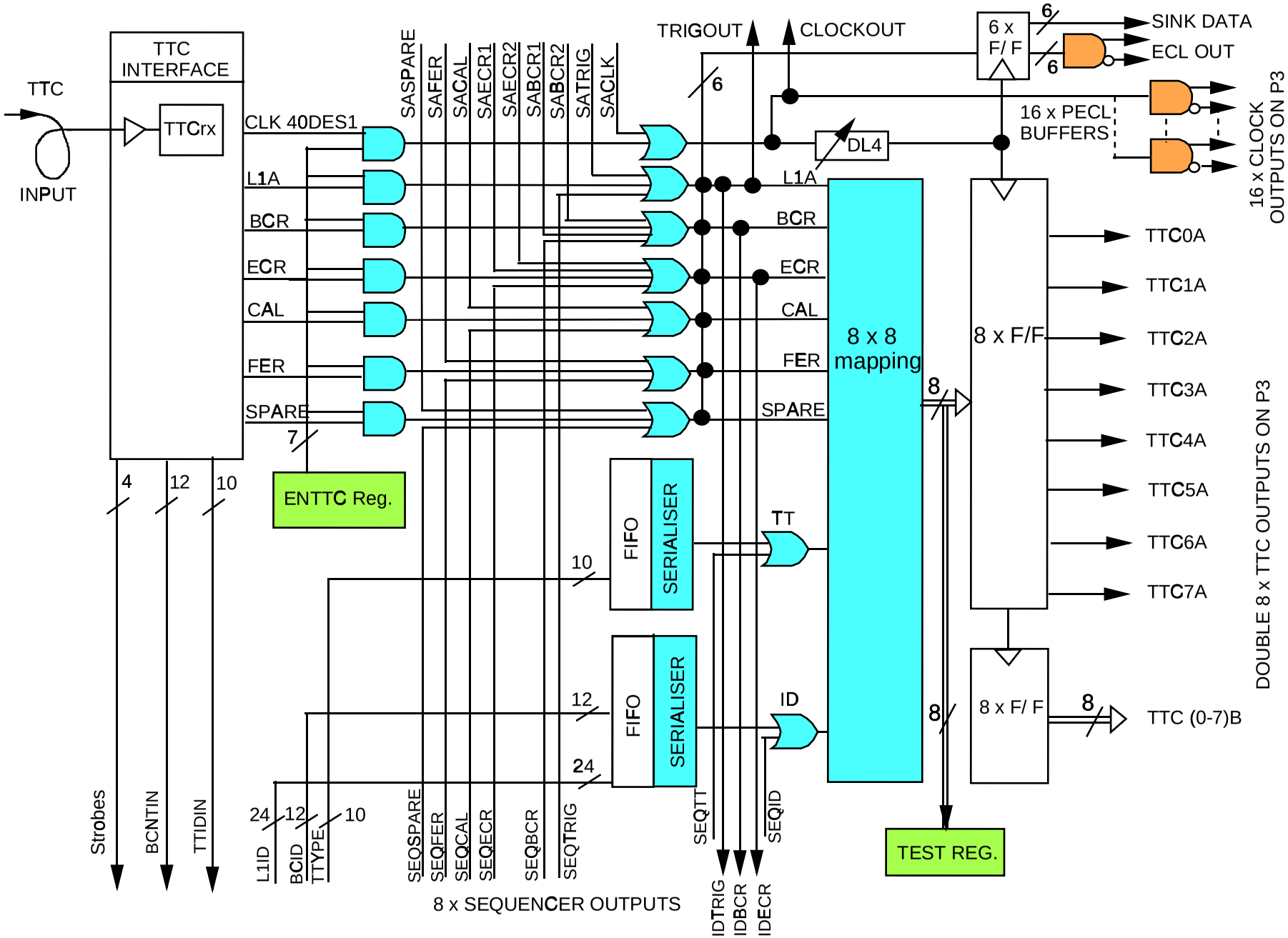
TIM - SCH - 03