TIM2 - CLOCKS FLOW AND DELAYS
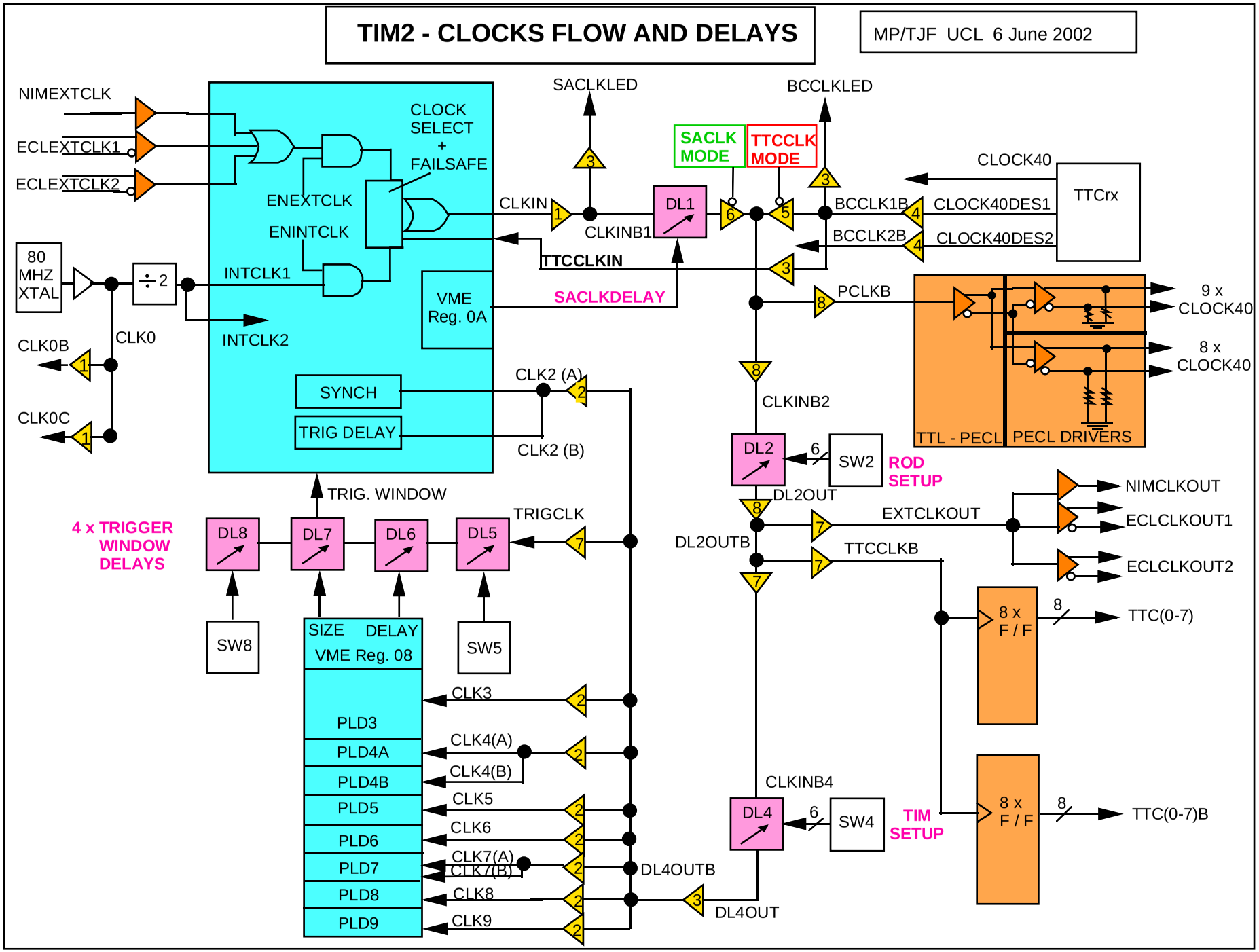
MP/TJF UCL 6 June 2002