ATLAS - SCT "TIM" SCHEMATICS 3 : ID & SEQUENCER / SINK
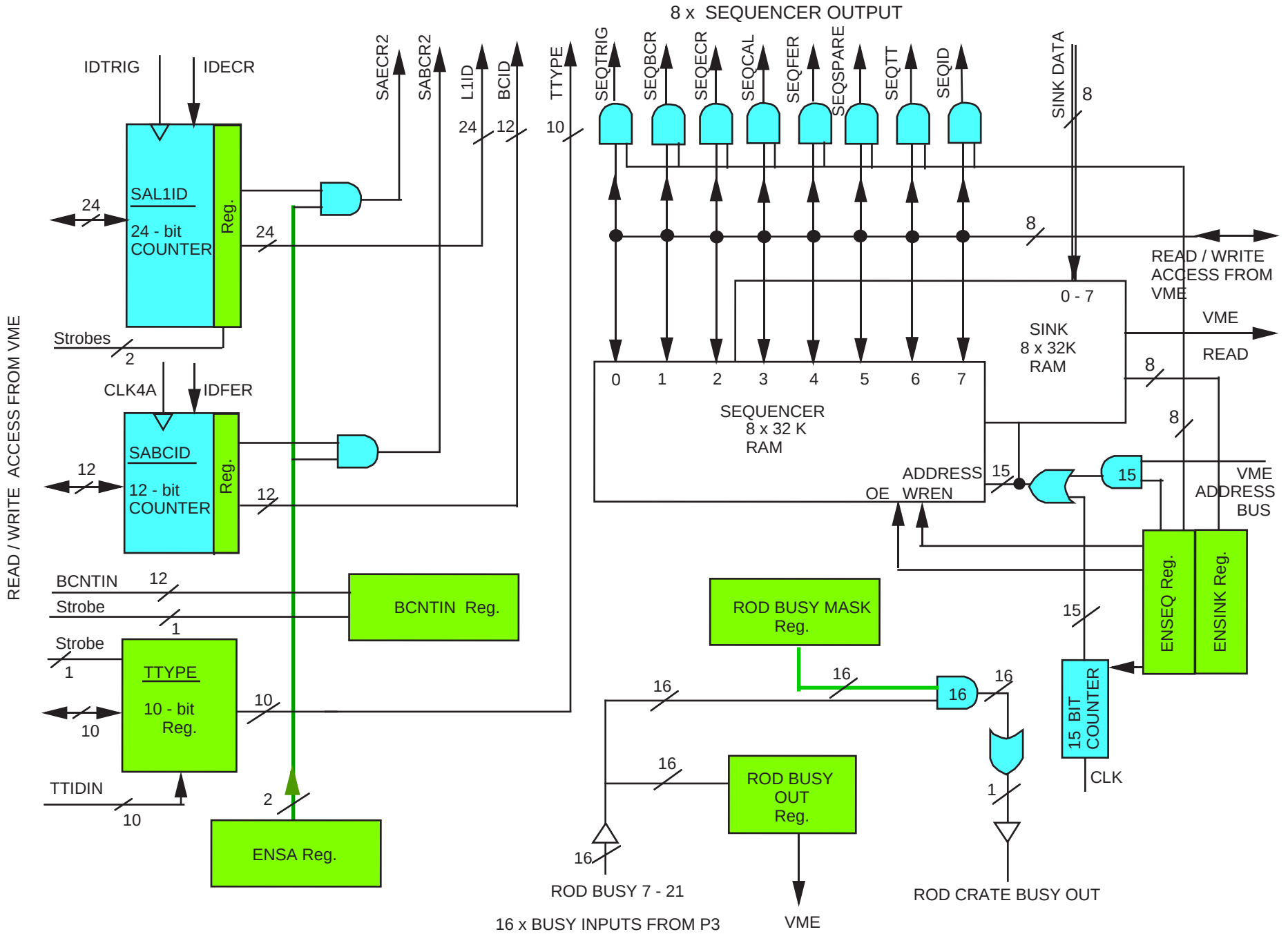
MP/TJF UCL 28.08.2001