A	2-TE-0095-009-03-B	THIS DRAWING CONFORMS TO B.S. 3939

SET DELAY FOR CLK1

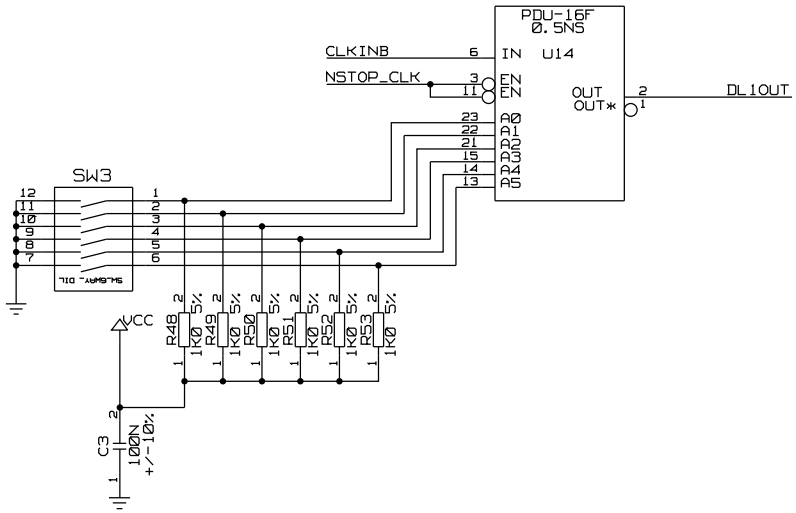

DELAY 9-41USEC IN STEPS OF 0.5USEC

SET DELAY FOR CLK2

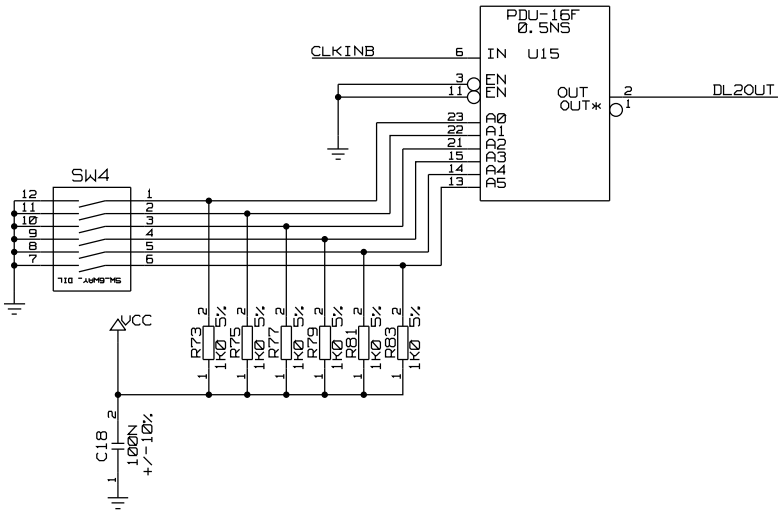

DELAY 9-41USEC IN STEPS OF 0.5USEC

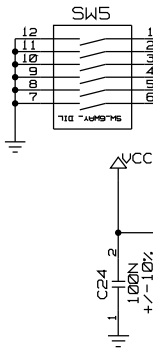

SET DELAY FOR CLK4

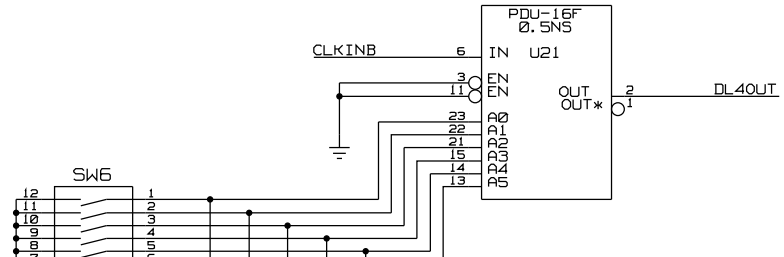
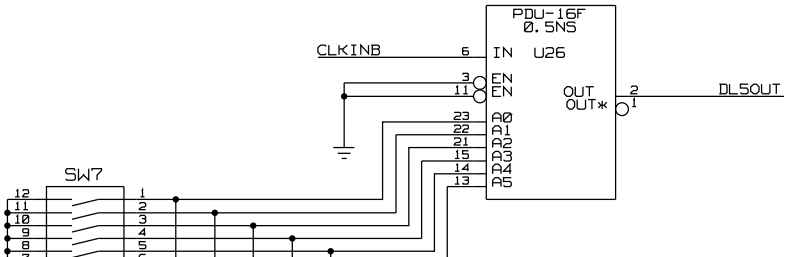
SET DELAY FOR CLK5