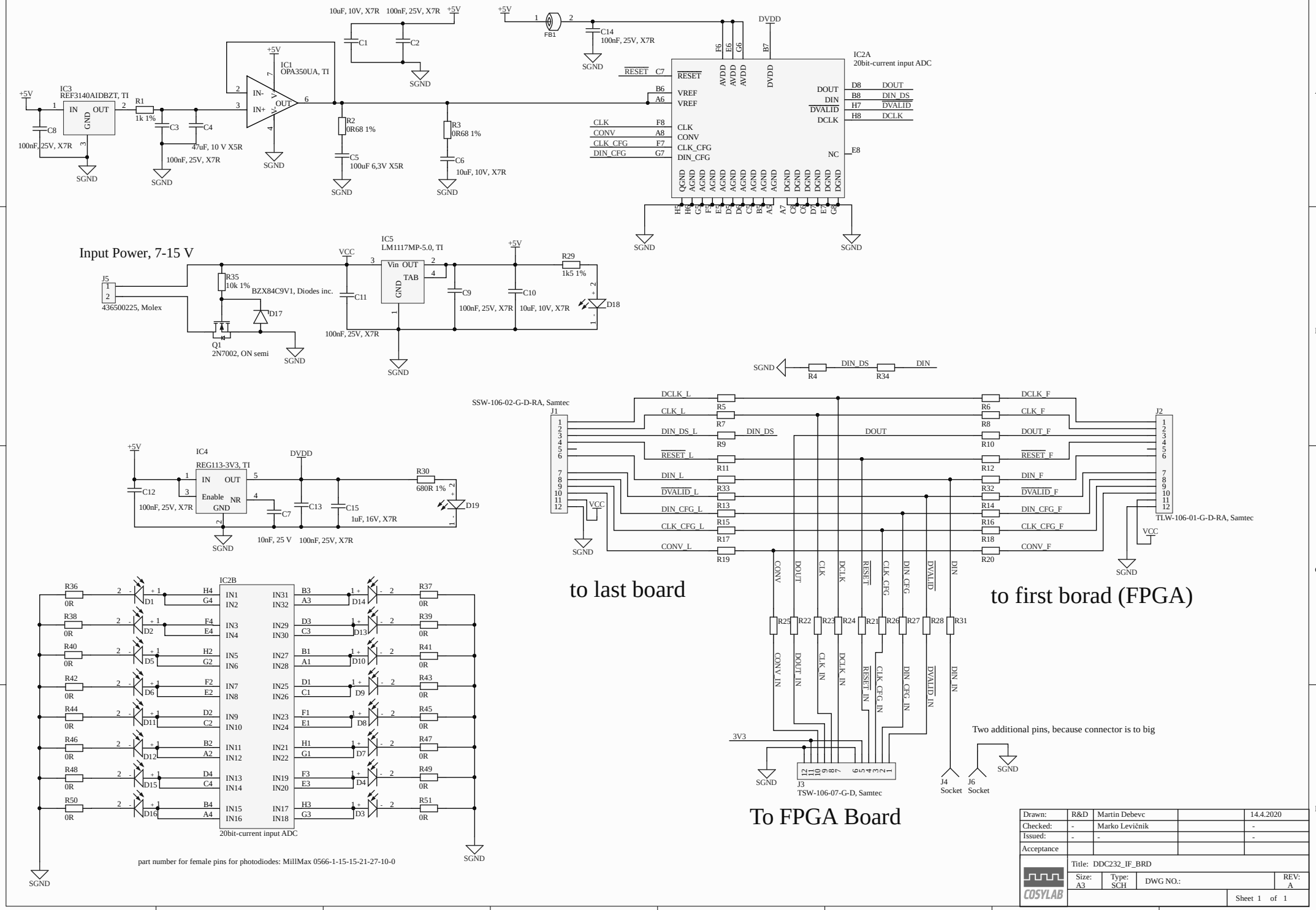

Drawn:	R&D	Martin Debevc		14.4.2020
Checked:	-	Marko Levičnik		-
Issued:	-	-		-
Acceptance				
Title: DDC232_IF_BRD				
Size: A3	Type: SCH	DWG NO.:		REV: A
				Sheet 1 of 1

COSYLAB