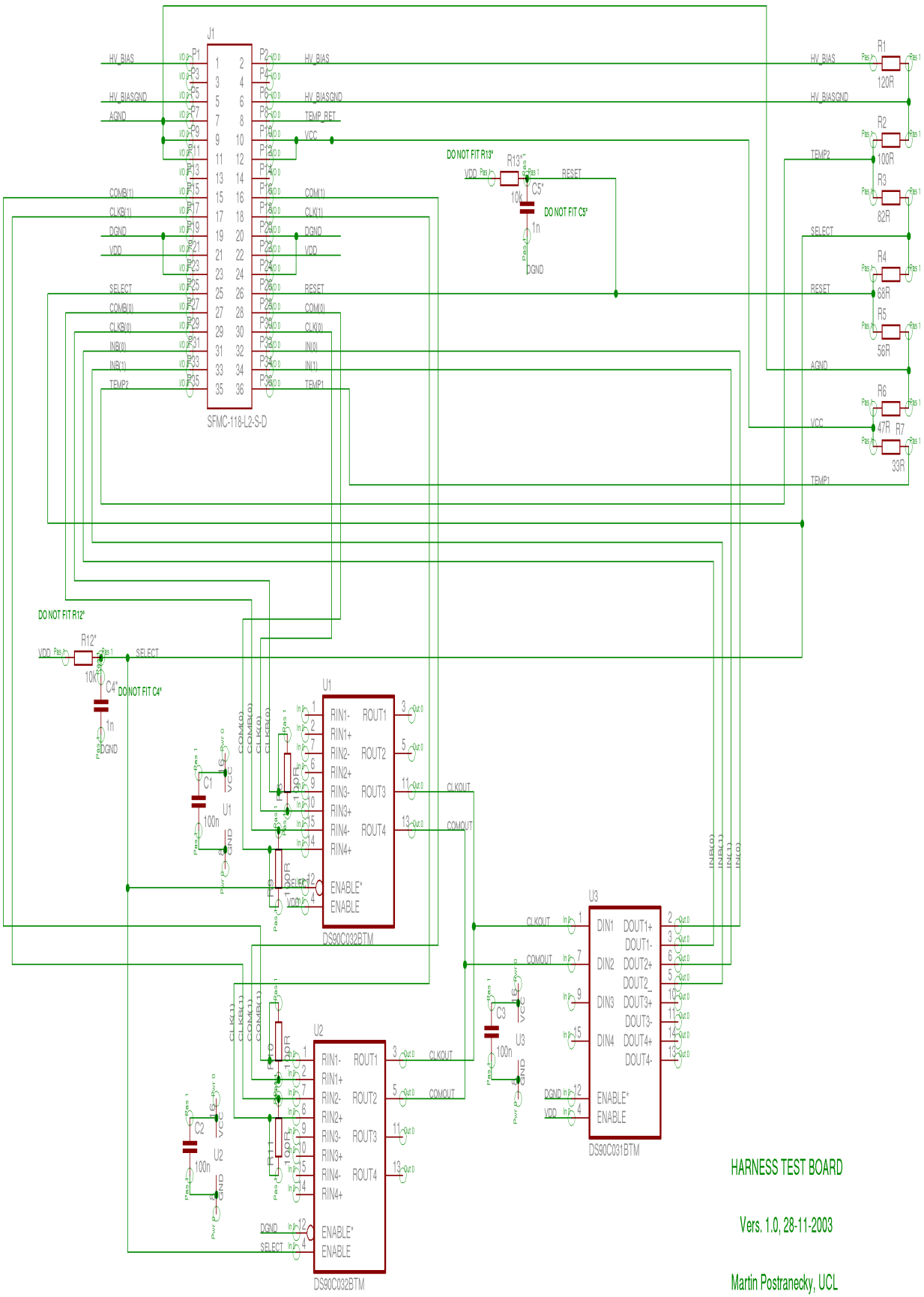

HARNESS TEST BOARD

Vers. 1.0, 28-11-2003

Martin Postranecky, UCL