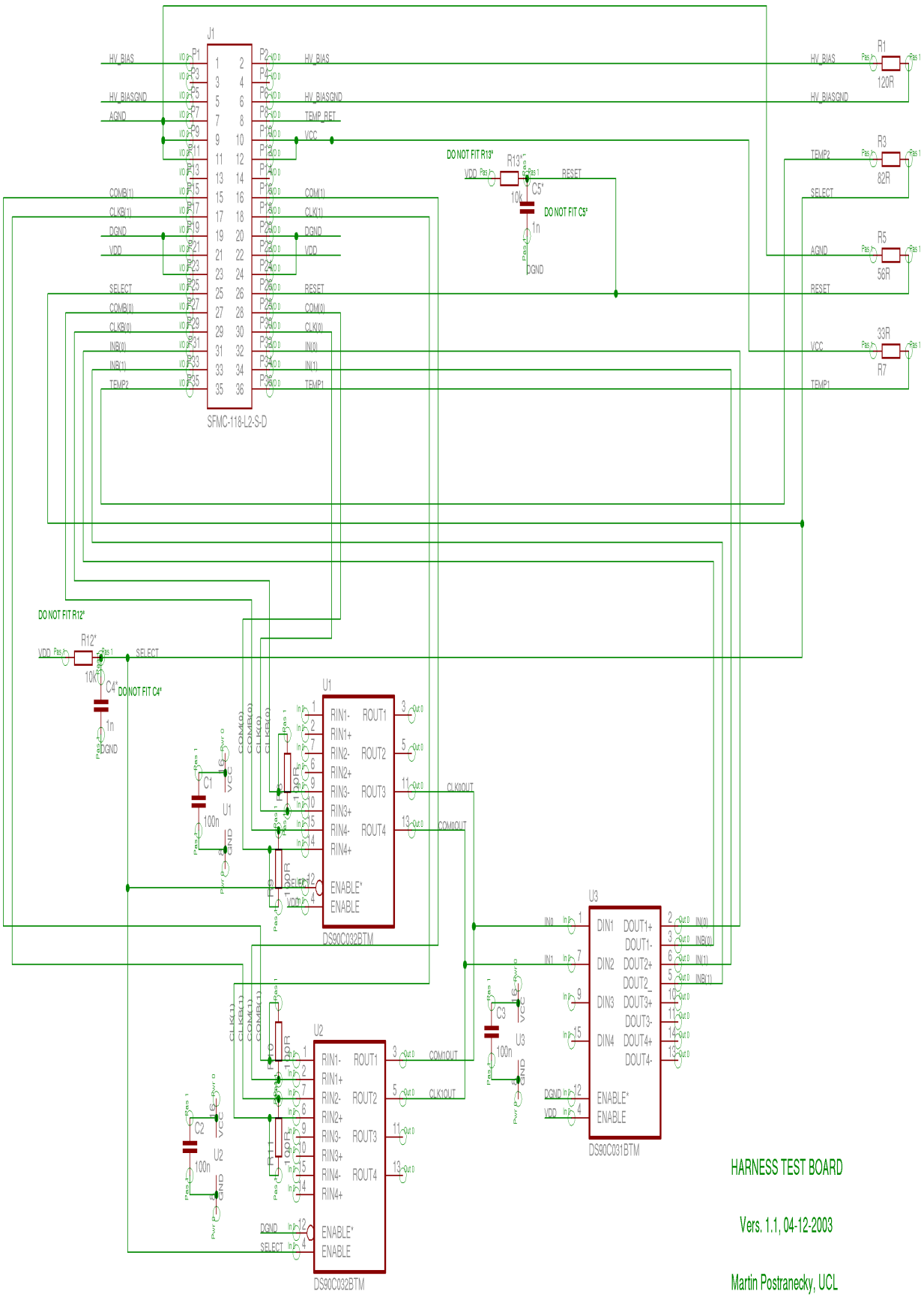

HARNESS TEST BOARD

Vers. 1.1, 04-12-2003

Martin Postranecky, UCL