Poster Number 126

Topical Workshop on Electronics for Particle Physics (TWEPP-2011) Vienna, Austria 26 to 30 Sept. 2011

Digital Atlas Vme Electronics - *DAVE* - Module

Cavendish Laboratory, Department of Physics, University of Cambridge
Maurice Goodrick <goodrick@hep.phy.cam.ac.uk>, Richard Shaw <shaw@hep.phy.cam.ac.uk>,
Dave Robinson <robinson@hep.phy.cam.ac.uk>

Department of Physics and Astronomy, University College London
Martin Postranecky <mp@hep.ucl.ac.uk>, Matthew Warren <warren@hep.ucl.ac.uk>

UNIVERSITY OF CAMBRIDGE

UCL

DAVE Module

- ATLAS-SCT have developed a new ATLAS trigger card, 'Digital Atlas Vme Electronics' ("DAVE")
- The unit was designed to provide a versatile array of interface and logic resources, including a large FPGA and NIM signalling
- Interfaces to both VME bus and USB hosts
- Originally planned as replacement for ATLAS-SCT stand-alone trigger & veto logic NIM crate
- Many more generic features added to the design
- Re-used ATLAS CTP firmware to exactly duplicate ATLAS running condition
- Random trigger, simple and complex deadtime, ECR, BCR, etc. are being generated to give exactly the same conditions in standalone running as experienced in combined runs
- DAVE card thus evolved into a powerful and flexible logic module
- Potentially useful to all ATLAS subsystems as well as for other non-ATLAS users (FPGA with NIM I/O, programmable delays)

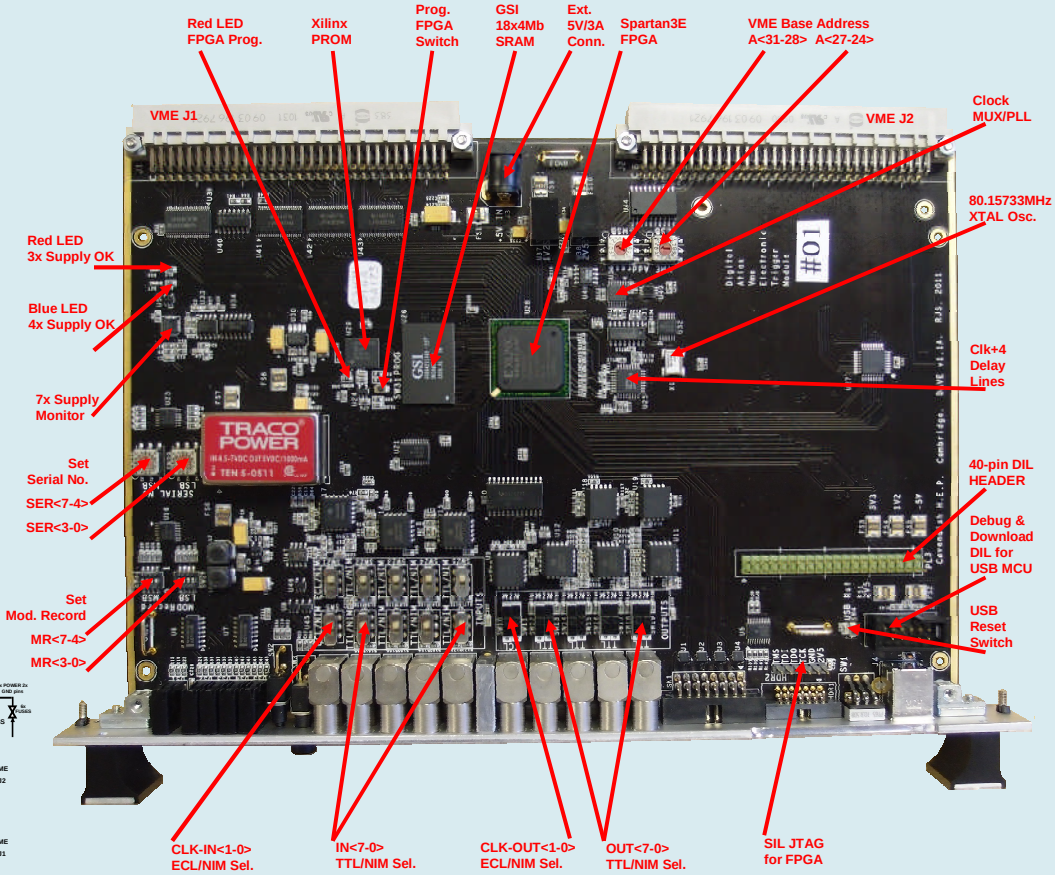

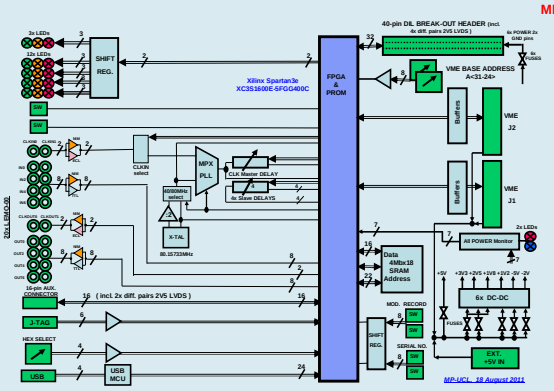

- Firmware is developed in a modular fashion allowing code contributions from interested users
- Requirements for CTP-like triggers have been implemented
- Further development will aim to provide ECR generation, source/sink RAM, trigger history and trigger type generation

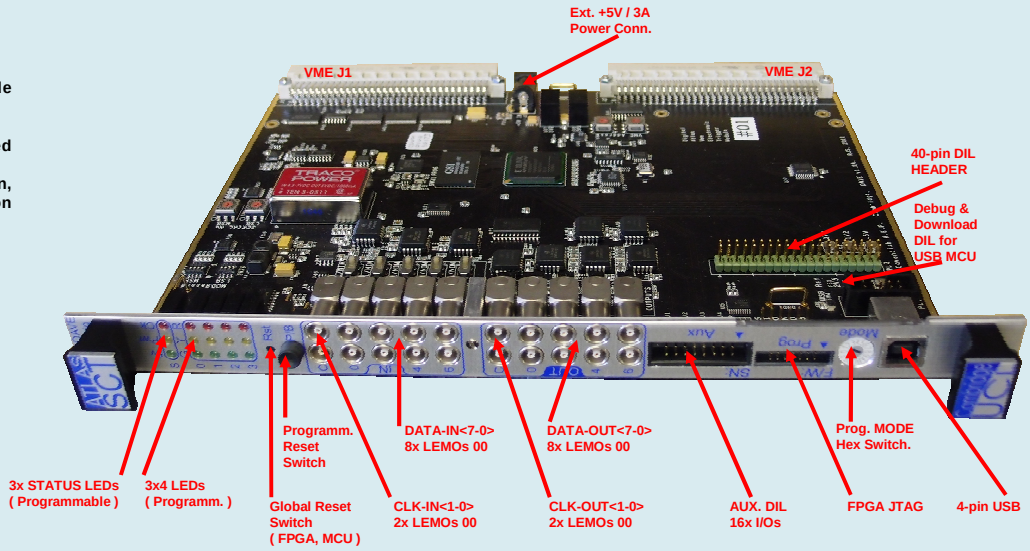

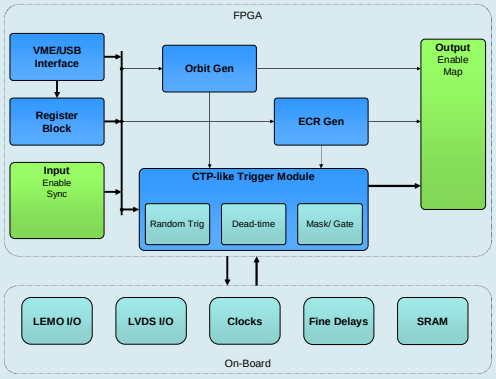

FOR MORE INFORMATION SEE :

https://twiki.cern.ch/twiki/bin/viewauth/Atlas/DAVEUserGuide

ATLAS SCT