A | 2-TE-0144-001-01-A | THIS DRAWING CONFORMS TO B.S. 3939

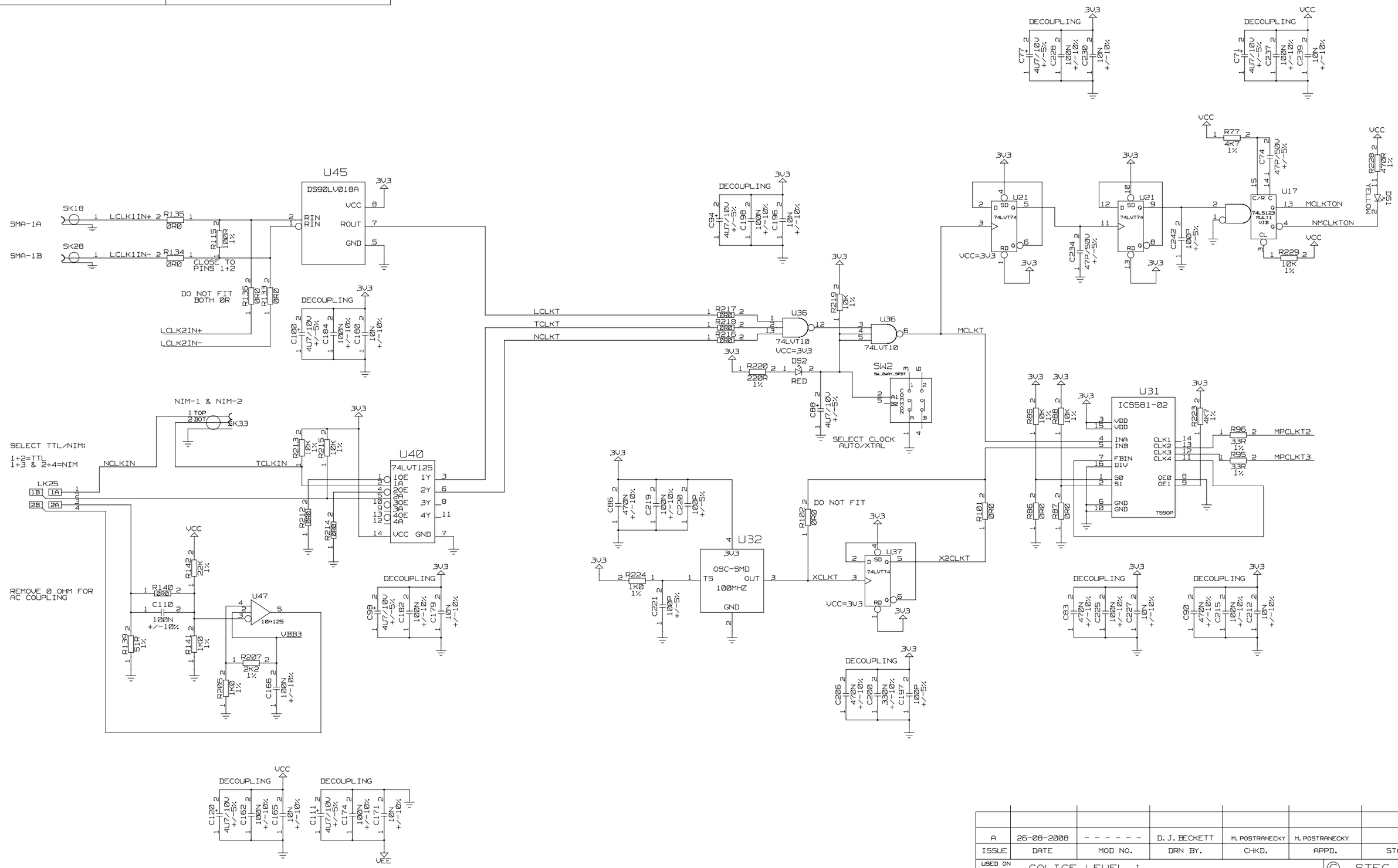

ISSUE	DATE	MOD NO.	DRN BY.	CHKD.	APPD.	STATUS
A	26-08-2008	- - - - - -	D. J. BECKETT	M. POSTRANECKY	M. POSTRANECKY	

USED ON: CALICE LEVEL 1

© STFC 2008

SCIENCE & TECHNOLOGY FACILITIES COUNCIL
RUTHERFORD APPLETON LABORATORY CHILTON, DIDCOT, OXON OX11 0QX

TITLE

PC3405M CIRCUIT
CALICE C&C
CLOCK IN

DATE STAMP: Fri Aug 29 12:48:56 2008

06/08

A 2-TE-0144-001-01-A

TOTAL NO. OF SHEETS 9

A 2-TE-0144-001-01-A

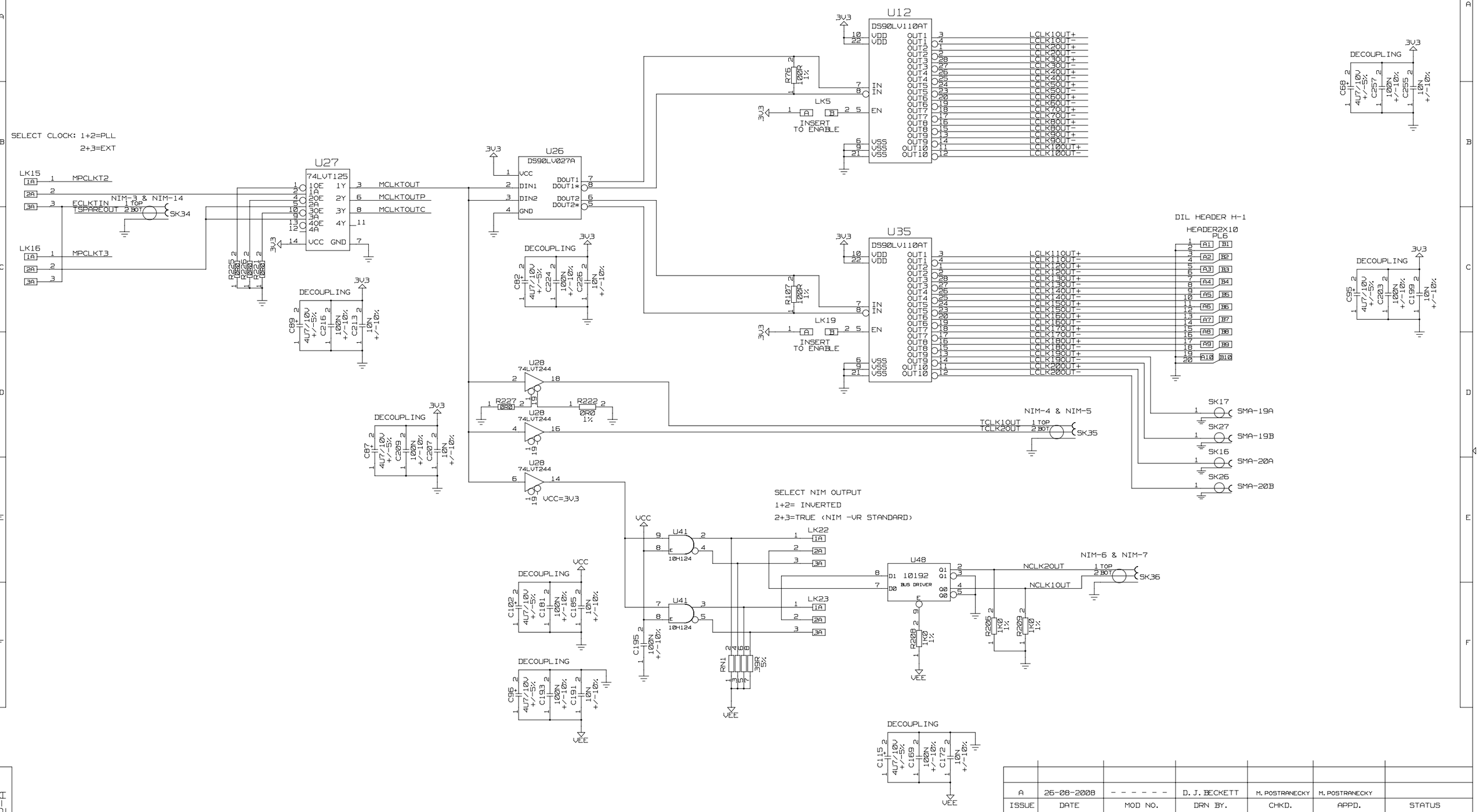

A	26-08-2008	- - - - - -	D. J. BECKETT	M. POSTRANECKY	M. POSTRANECKY	
ISSUE	DATE	MOD NO.	DRN BY.	CHKD.	APPD.	STATUS

USED ON CALICE LEVEL 1

© STFC 2008

SCIENCE & TECHNOLOGY FACILITIES COUNCIL
RUTHERFORD APPLETON LABORATORY CHILTON, DIDCOT, OXON OX11 0QX

TITLE

PC3405M CIRCUIT
CALICE C&C
CLOCK OUT

DATE STAMP
Fri Aug 29 12:49:03 2008

06/08

A 2-TE-0144-001-02-A

TOTAL NO. OF SHEETS 9

A 2-TE-0144-001-02-A

A | 2-TE-0144-001-03-A | THIS DRAWING CONFORMS TO B.S. 3939

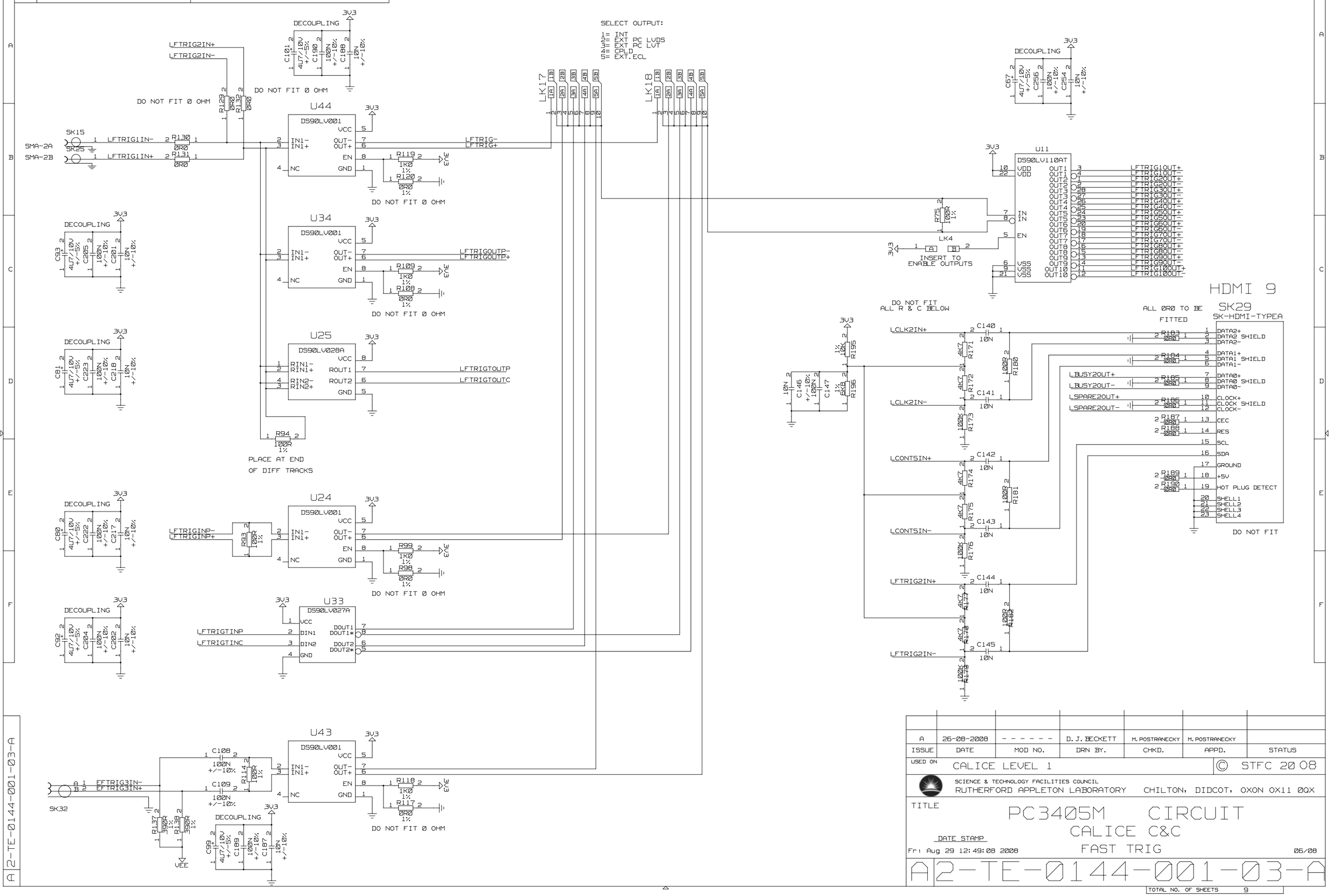

ISSUE	DATE	MOD NO.	DRN BY.	CHKD.	APPD.	STATUS
A	26-08-2008	- - - - - -	D. J. BECKETT	M. POSTRANECKY	M. POSTRANECKY	

USED ON: CALICE LEVEL 1

© STFC 2008

SCIENCE & TECHNOLOGY FACILITIES COUNCIL
RUTHERFORD APPLETON LABORATORY CHILTON, DIDCOT, OXON OX11 0QX

TITLE

PC3405M CIRCUIT
CALICE C&C
FAST TRIG

DATE STAMP: Fri Aug 29 12:49:08 2008

06/08

A 2-TE-0144-001-03-A

TOTAL NO. OF SHEETS 9

A 2-TE-0144-001-03-A

A | 2-TE-0144-001-04-A | THIS DRAWING CONFORMS TO B.S. 3939

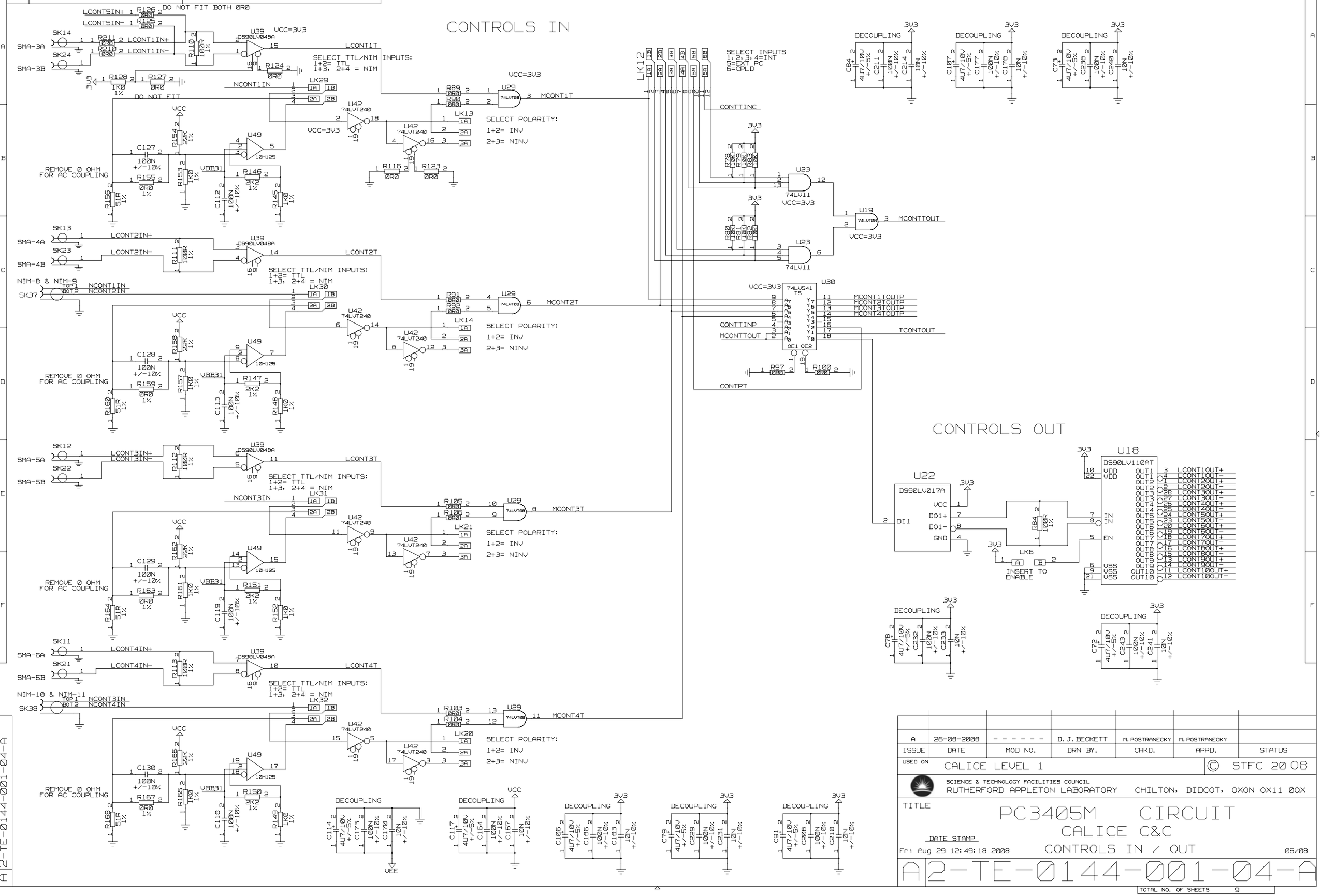

A	26-08-2008	- - - - - -	D. J. BECKETT	M. POSTRANECKY	M. POSTRANECKY	
ISSUE	DATE	MOD NO.	DRN BY.	CHKD.	APPD.	STATUS

USED ON CALICE LEVEL 1 © STFC 2008

SCIENCE & TECHNOLOGY FACILITIES COUNCIL
RUTHERFORD APPLETON LABORATORY CHILTON, DIDCOT, OXON OX11 0QX

TITLE

PC3405M CIRCUIT
CALICE C&C
CONTROLS IN / OUT

DATE STAMP

Fri Aug 29 12:49:18 2008

06/08

A 2-TE-0144-001-04-A

TOTAL NO. OF SHEETS 9

A 2-TE-0144-001-04-A

A | 2-TE-0144-001-05-A | THIS DRAWING CONFORMS TO B.S. 3939

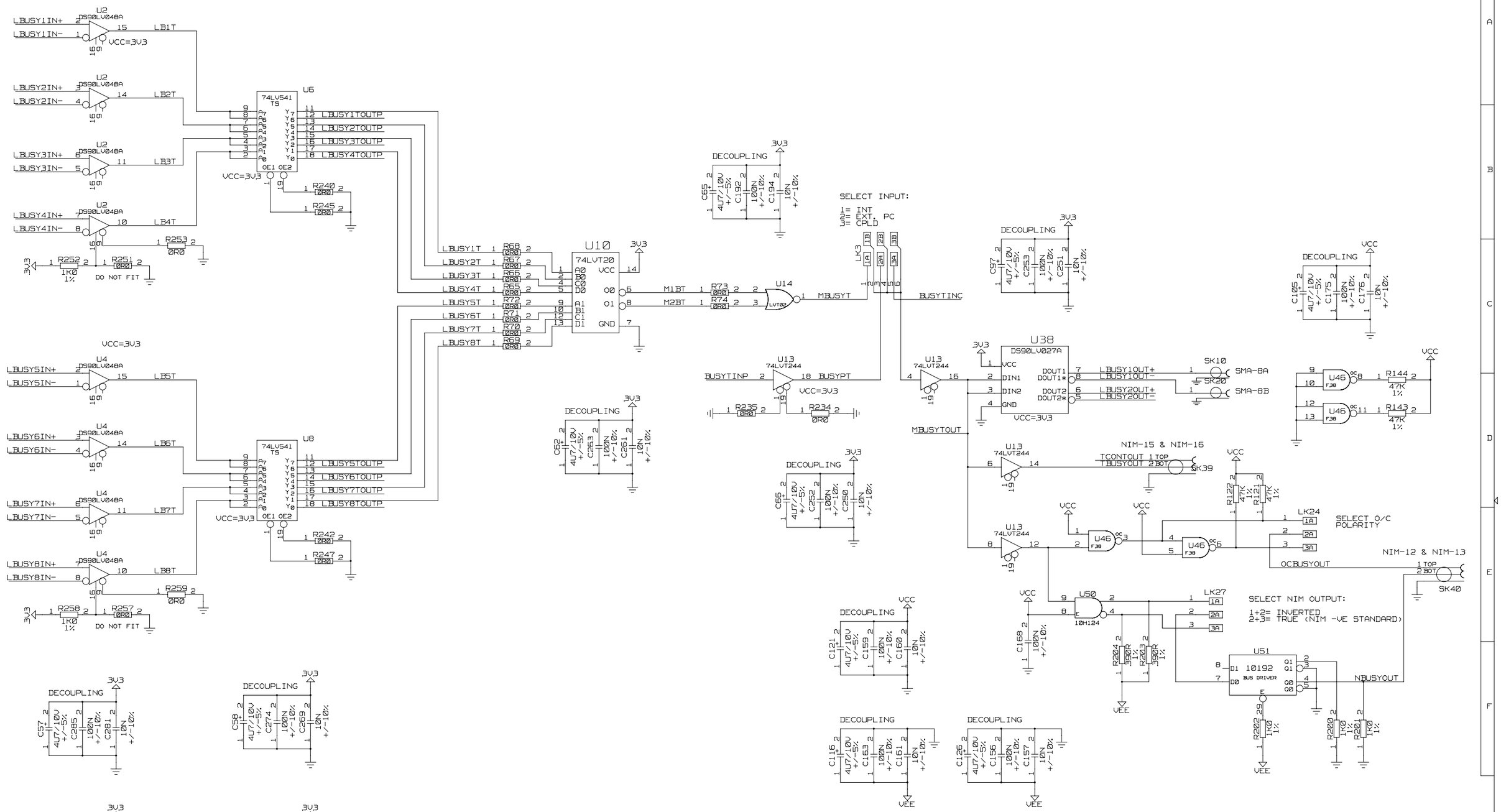

ISSUE	DATE	MOD NO.	DRN BY.	CHKD.	APPD.	STATUS
A	26-08-2008	- - - - - -	D. J. BECKETT	M. POSTRANECKY	M. POSTRANECKY	

USED ON: CALICE LEVEL 1

© STFC 2008

SCIENCE & TECHNOLOGY FACILITIES COUNCIL
RUTHERFORD APPLETON LABORATORY CHILTON, DIDCOT, OXON OX11 0QX

TITLE

PC3405M CIRCUIT
CALICE C&C
BUSY

DATE STAMP: Fri Aug 29 12:49:26 2008

06/08

A 2-TE-0144-001-05-A

TOTAL NO. OF SHEETS 9

A 2-TE-0144-001-05-A

A | 2-TE-0144-001-06-A | THIS DRAWING CONFORMS TO B.S. 3939

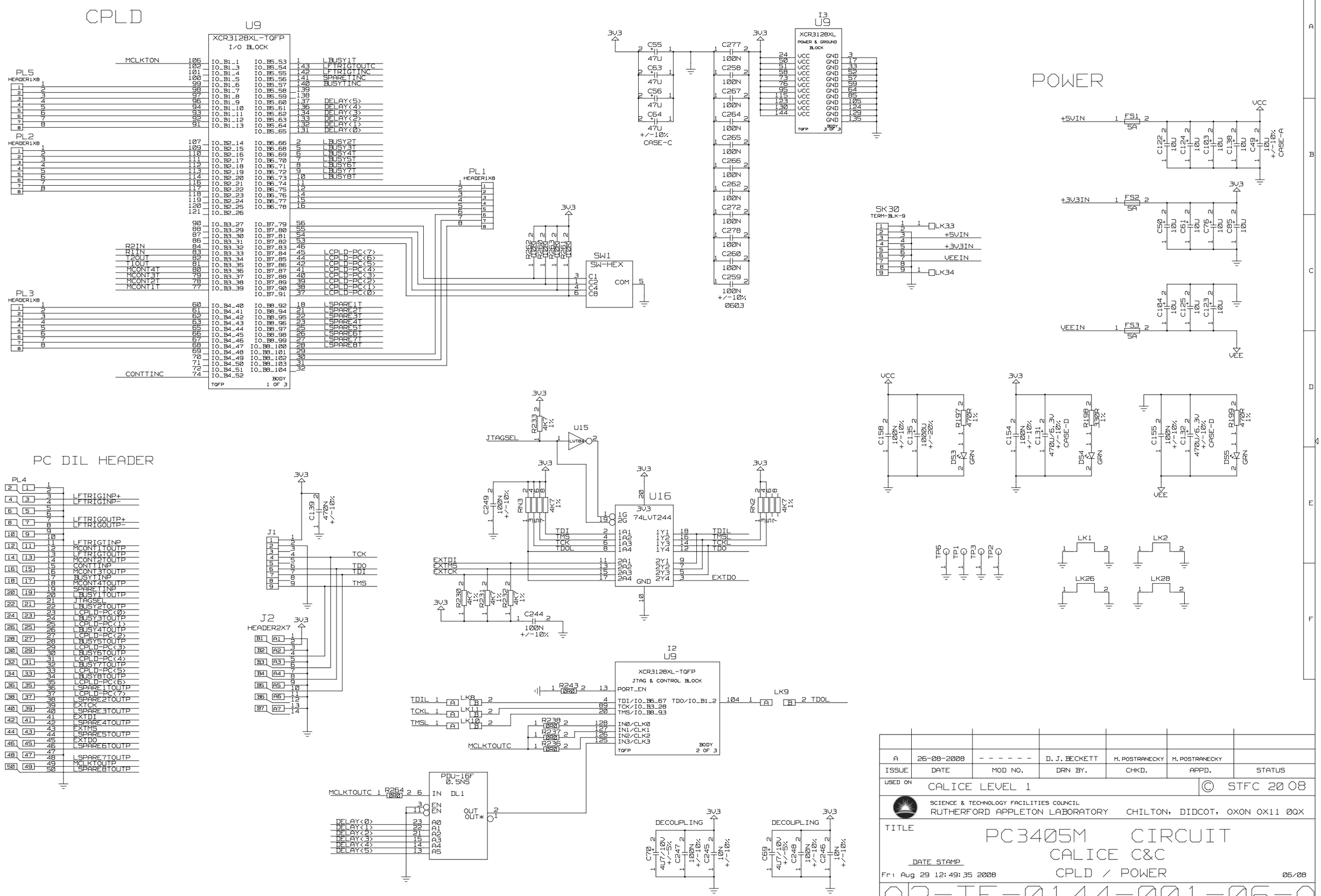

A	26-08-2008	- - - - - -	D. J. BECKETT	M. POSTRANECKY	M. POSTRANECKY	
ISSUE	DATE	MOD NO.	DRN BY.	CHKD.	APPD.	STATUS

USED ON: CALICE LEVEL 1

© STFC 2008

SCIENCE & TECHNOLOGY FACILITIES COUNCIL
RUTHERFORD APPLETON LABORATORY CHILTON, DIDCOT, OXON OX11 0QX

TITLE

PC3405M CIRCUIT
CALICE C&C
CPLD / POWER

DATE STAMP: Fri Aug 29 12:49:35 2008

06/08

A 2-TE-0144-001-06-A

TOTAL NO. OF SHEETS 9

A 2-TE-0144-001-06-A

A | 2-TE-0144-001-07-A | THIS DRAWING CONFORMS TO B.S. 3939

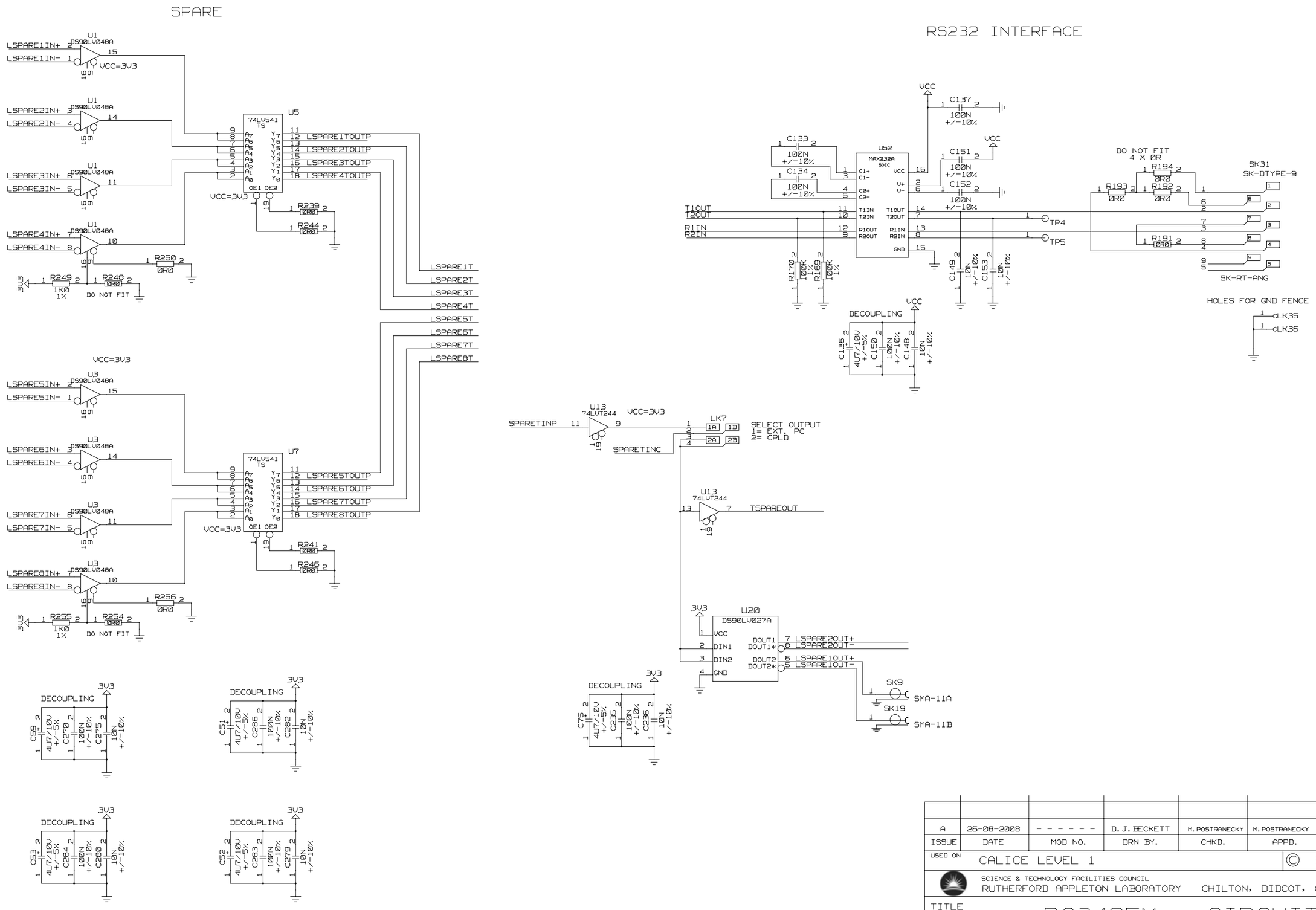

ISSUE	DATE	MOD NO.	DRN BY.	CHKD.	APPD.	STATUS
A	26-08-2008	- - - - - -	D. J. BECKETT	M. POSTRANECKY	M. POSTRANECKY	

USED ON: CALICE LEVEL 1

© STFC 2008

SCIENCE & TECHNOLOGY FACILITIES COUNCIL
RUTHERFORD APPLETON LABORATORY CHILTON, DIDCOT, OXON OX11 0QX

TITLE

PC3405M CIRCUIT
CALICE C&C

DATE STAMP: Fri Aug 29 12:49:41 2008

SPARE / RS232 INTERFACE

06/08

A 2-TE-0144-001-07-A

TOTAL NO. OF SHEETS 9

A 2-TE-0144-001-07-A

A | 2-TE-0144-001-08-A | THIS DRAWING CONFORMS TO B.S. 3939

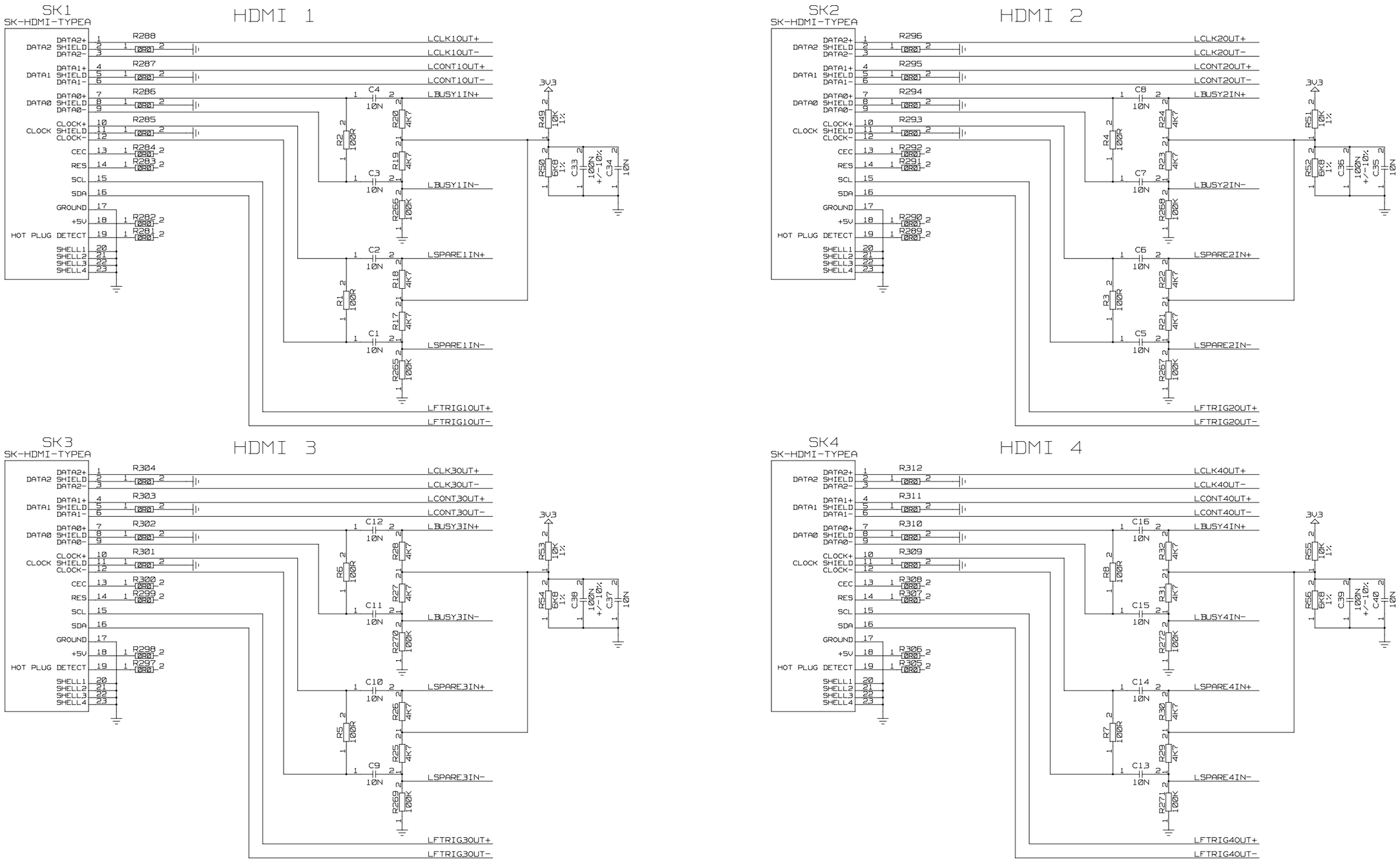

ISSUE	DATE	MOD NO.	DRN BY.	CHKD.	APPD.	STATUS
A	26-08-2008	- - - - - -	D. J. BECKETT	M. POSTRANECKY	M. POSTRANECKY	

USED ON CALICE LEVEL 1

© STFC 2008

SCIENCE & TECHNOLOGY FACILITIES COUNCIL
RUTHERFORD APPLETON LABORATORY CHILTON, DIDCOT, OXON OX11 0QX

TITLE

PC3405M CIRCUIT
CALICE C&C
HDMI CONNECTORS

DATE STAMP
Fri Aug 29 12:49:48 2008

06/08

A 2-TE-0144-001-08-A

TOTAL NO. OF SHEETS 9

A 2-TE-0144-001-08-A

A | 2-TE-0144-001-09-A | THIS DRAWING CONFORMS TO B.S. 3939

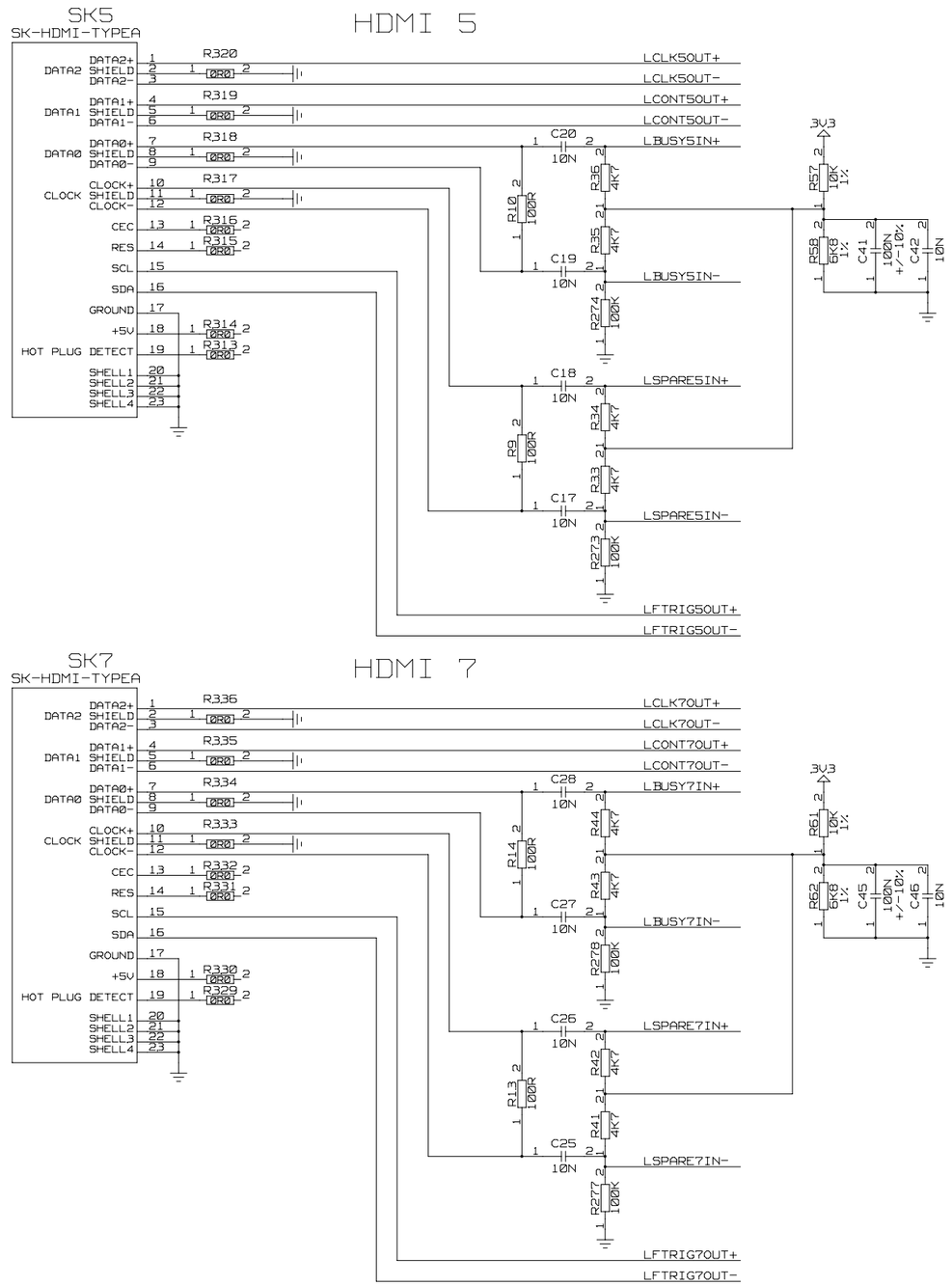

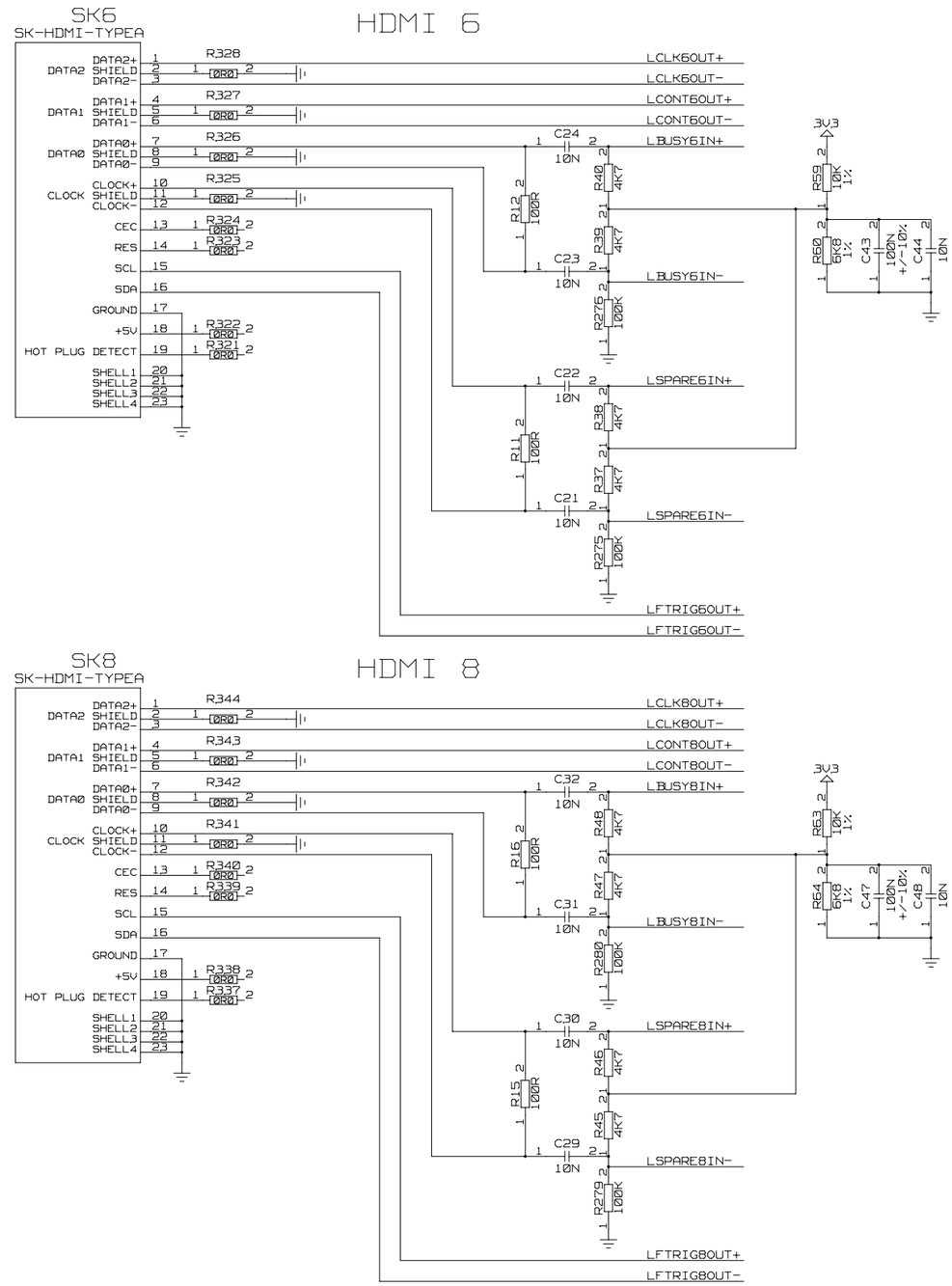

ISSUE	DATE	MOD NO.	DRN BY.	CHKD.	APPD.	STATUS
A	26-08-2008	- - - - - -	D. J. BECKETT	M. POSTRANECKY	M. POSTRANECKY	

USED ON: CALICE LEVEL 1

© STFC 2008

SCIENCE & TECHNOLOGY FACILITIES COUNCIL
RUTHERFORD APPLETON LABORATORY CHILTON, DIDCOT, OXON OX11 0QX

TITLE

PC3405M CIRCUIT
CALICE C&C
HDMI CONNECTORS

DATE STAMP: Fri Aug 29 12:49:54 2008

06/08

A 2-TE-0144-001-09-A

TOTAL NO. OF SHEETS 9

A 2-TE-0144-001-09-A