A2 THIS DRAWING CONFORMS TO B.S. 3939

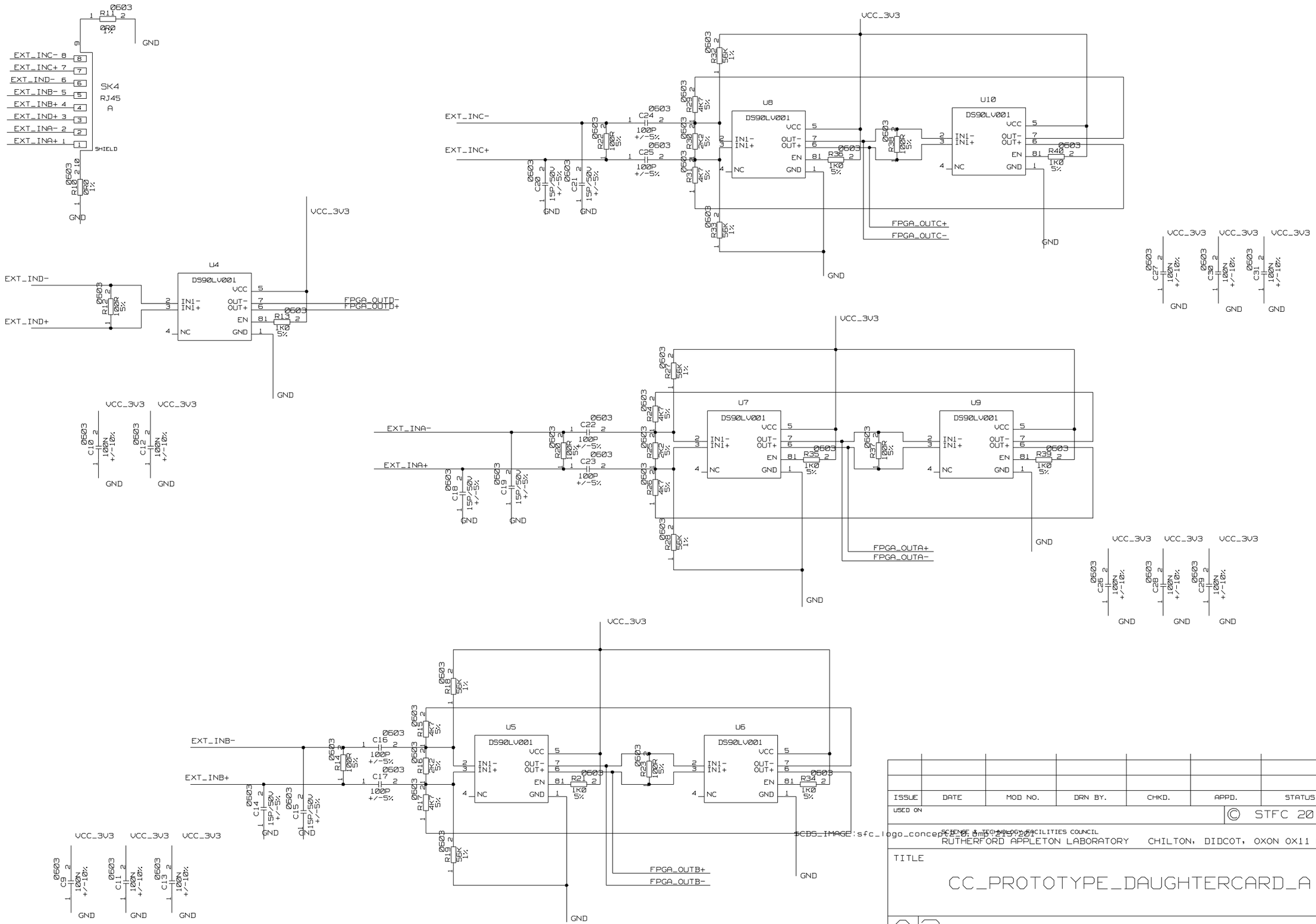

ISSUE	DATE	MOD NO.	DRN BY.	CHKD.	APPD.	STATUS
USED ON						

© STFC 20

SCIENCE & TECHNOLOGY FACILITIES COUNCIL
RUTHERFORD APPLETON LABORATORY CHILTON, DIDCOT, OXON OX11 0QX

TITLE

CC_PROTOTYPE_DAUGHTERCARD_A

A2

TOTAL NO. OF SHEETS