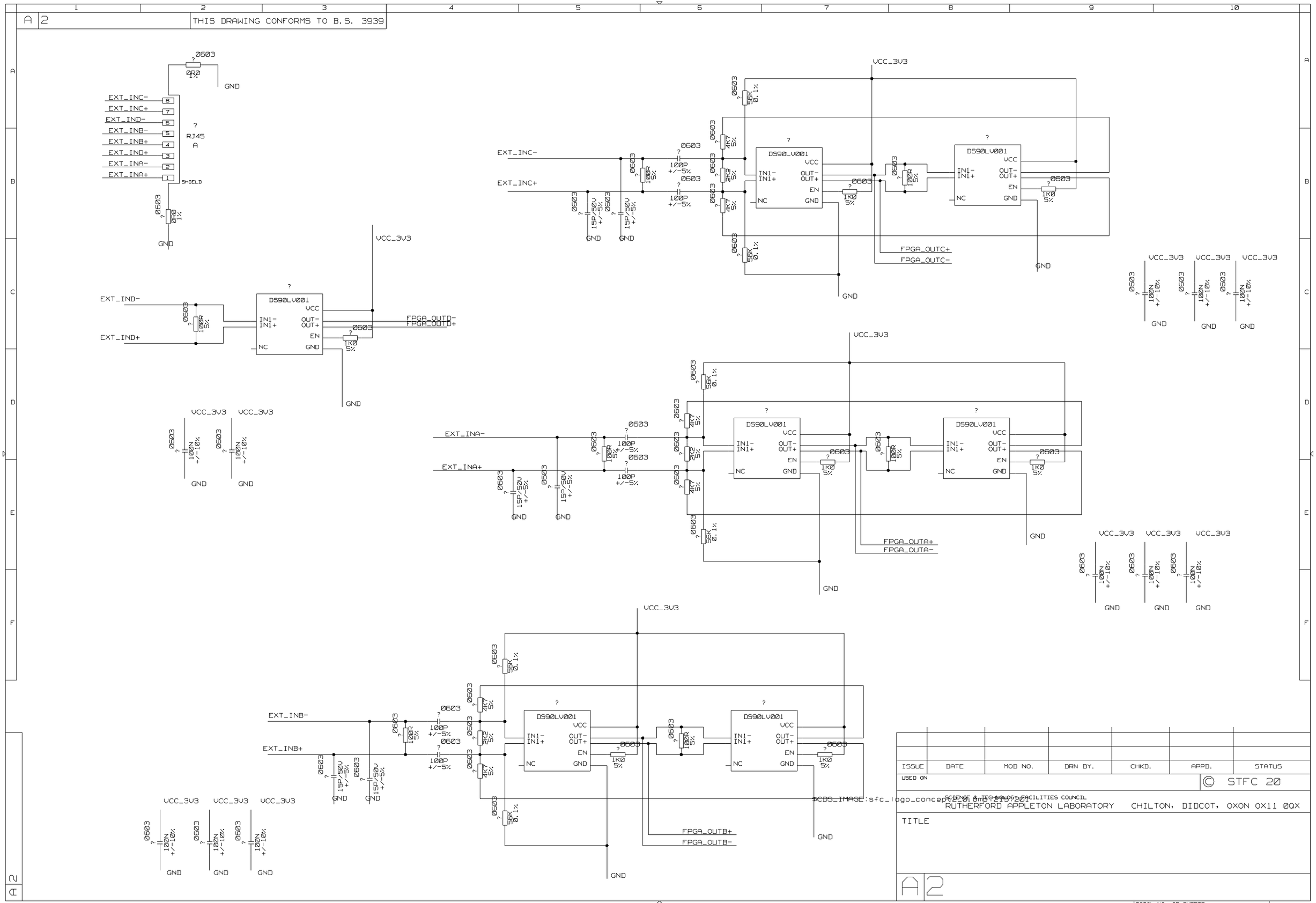
A 2
THIS DRAWING CONFORMS TO B.S. 3939
EXT_INC-
EXT_INC+
EXT_IND-
EXT_INB-
EXT_INB+
EXT_IND+
EXT_INA-
EXT_INA+
RJ45
SHIELD
DS90LV001
VCC_3V3
GND
FPGA_OUTC+
FPGA_OUTC-
FPGA_OUTD-
FPGA_OUTD+
FPGA_OUTA+
FPGA_OUTA-
FPGA_OUTB+
FPGA_OUTB-
ISSUE
DATE
MOD NO.
DRN BY.
CHKD.
APPD.
STATUS
USED ON
© STFC 20
SCIENCE & TECHNOLOGY FACILITIES COUNCIL
RUTHERFORD APPLETON LABORATORY CHILTON, DIDCOT, OXON OX11 0QX
TITLE
A 2
TOTAL NO. OF SHEETS